PRELIMINARY PLAT OF
LAKE VIEW COMMONS

BLOCK 14, IN LAKEVIEW ADDITION TO JOLIET, BEING A SUBDIVISION OF THE SOUTHWEST QUARTER OF THE SOUTHWEST QUARTER OF SECTION 17 AND THE EAST HALF OF THE SOUTHEAST QUARTER OF SECTION 18 AND PART OF THE NORTHEAST QUARTER OF THE NORTHEAST QUARTER OF SECTION 19 AND PART OF THE NORTHWEST QUARTER OF THE NORTHWEST QUARTER OF SECTION 20, ALL IN TOWNSHIP 35 NORTH, RANGE 10 EAST OF THE THIRD PRINCIPAL MERIDIAN, ACCORDING TO THE PLAT THEREOF RECORDED SEPTEMBER 13, 1904, AS DOCUMENT NO. 22904 IN WILL COUNTY, ILLINOIS. CONTAINING 3.097 MORE OR LESS

BENCHMARK: SPIKE IN NORTH FACE OF P.U. POLE AT SW CORNER OF MORRIS & FERRIS. ELEV. = 640.76

PROPERTY ZONED R-2

OWNER: HARRIS BANK TR. NO. 5079
78 N. CHICAGO STREET
JOLIET, IL

SURVEYOR/ENGINEER
ROGINA & ASSOCIATES, LTD
93 CATERPILLAR DRIVE
JOLIET, IL 60436

PIN NO: 07-18-406-002
07-18-406-003

LEGEND

PROPOSED		EXISTING
	MANHOLE USE NOTED	
	CATCH BASIN	OR
	INLET	OR
	WATER VALVE IN BOX	
	FIRE HYDRANT	
	STREET LIGHT	
	WATER VALVE VAULT	
	TREE	
—)—	STORM SEWER	—)—
—>—	SANITARY SEWER	—>—
—W—	WATER MAIN	—W—

GRAPHIC SCALE
30 0 15 30
(IN FEET)
1 inch = 30 ft.

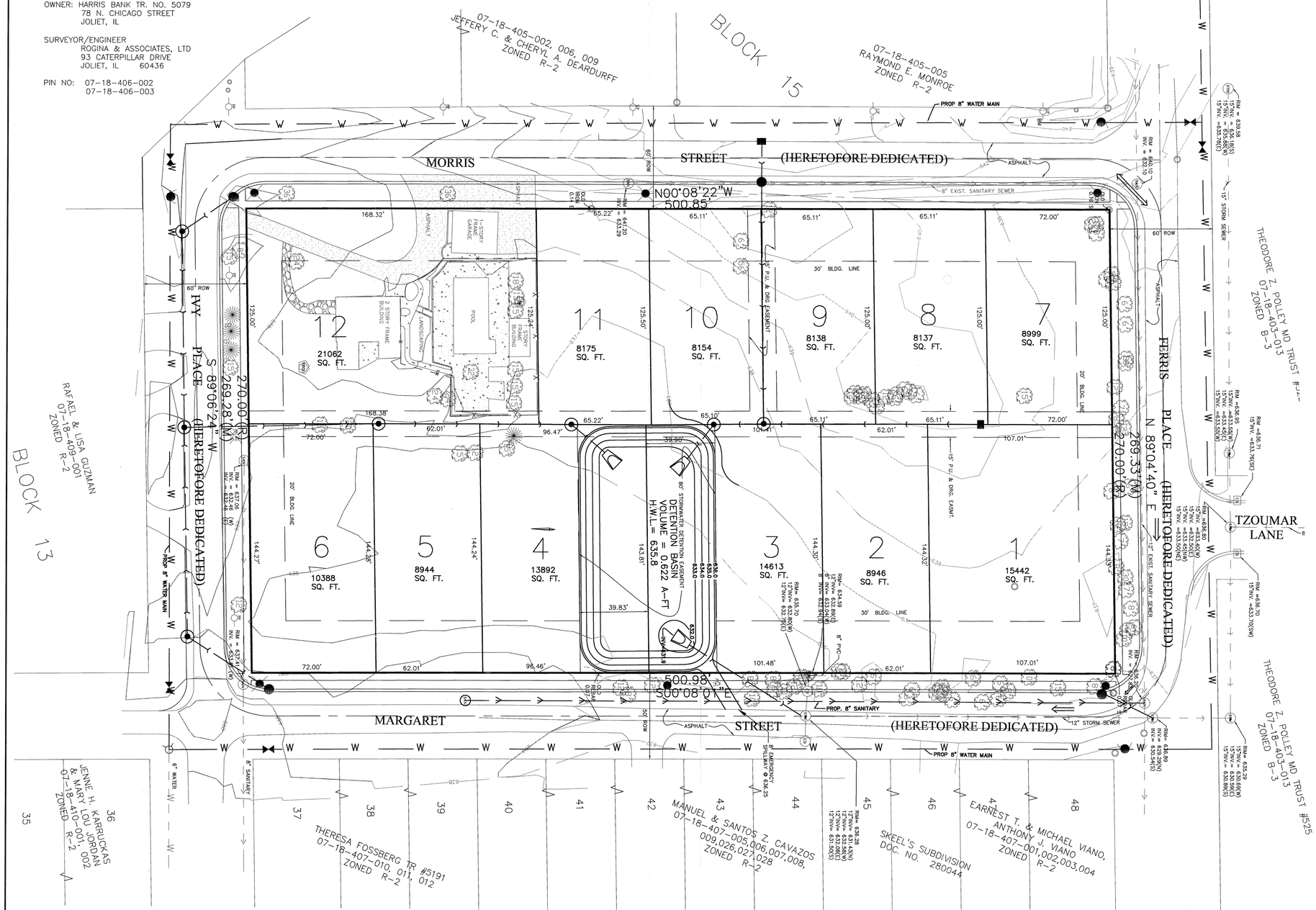

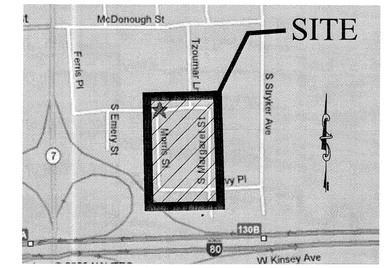

STATE OF ILLINOIS)
) SS
COUNTY OF WILL)

APPROVED BY THE JOLIET CITY COUNCIL OF WILL COUNTY, ILLINOIS. THIS _____ DAY OF _____, A.D., 20___.

_____
MAYOR

_____
CITY CLERK

STATE OF ILLINOIS)
) SS
COUNTY OF WILL)

APPROVED BY THE CITY OF JOLIET PLAN COMMISSION OF COUNTY AFORESAID. THIS _____ DAY OF _____, A.D., 20___.

_____
CHAIRMAN OF THE PLAN COMMISSION

_____
SECRETARY

GENERAL NOTES:

1. THERE IS NO EXISTING WETLANDS ON THIS SITE.
2. THERE IS NO EXISTING FLOODPLAINS ON THIS SITE.
3. MAINTENANCE OF THE PERMANENT DETENTION AREAS SHALL BE THE RESPONSIBILITY OF ALL THE PROPERTY OWNERS WITHIN THE SUBDIVISION. MAINTENANCE SHALL INCLUDE BANK OF WATER LEVELS, OUTFALL STRUCTURES AND STORM STABILIZATION, BANK MAINTENANCE, FUTURE SEDIMENT REMOVAL OR DREDGING, STABILIZATION SEWER PIPES WITHIN THE DETENTION EASEMENT.
4. DETENTION BASINS SHALL ADHERE TO SECTION 605-ILCS5/9-117 IN REGARDS TO STORMWATER DETENTION BASINS' PROXIMITY TO THE ROAD RIGHT OF WAY OF MARGARET STREET.
5. ALL DETENTION BASINS SHALL BE IN ACCORDANCE WITH THE REQUIREMENTS OF THE CITY OF JOLIET STORM WATER DETENTION ORDINANCE.
6. ALL RESIDENTIAL STREET LIGHTING SHALL BE CONSTRUCTED TO LOCAL ROAD STANDARDS AND THE CITY OF JOLIET ILLUMINATION REQUIREMENTS. ALL STREETLIGHTS SHALL BE COM-ED 25-FT. MOUNTING HEIGHT 150-WATT HIGH PRESSURE SODIUM LIGHTS.
7. LOTS 1,6 AND 7 THROUGH 12 MUST REIMBURSE THE CITY OF JOLIET $300.00 FOR THE CITY INSTALLED SANITARY SEWER THAT WILL BE USED TO PROVIDE SERVICE TO THESE LOTS.
8. ALL LOTS IN THE SUBDIVISION SHALL PROVIDE MINIMUM LANDSCAPING AND SCREENING REQUIREMENTS FOR SINGLE FAMILY LOTS PER ORDINANACE 14644.
9. DETENTION POND LANDSCAPING SHALL MEET CITY OF JOLIET REQUIREMENTS.

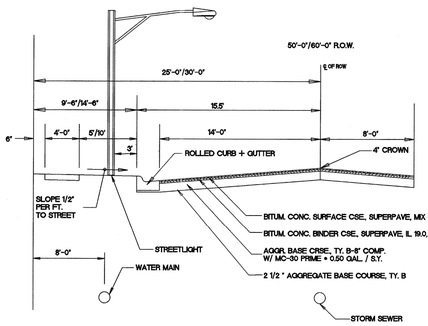

NOTE:
BITUMINOUS SURFACE SHALL BE KEPT 1/4" ABOVE THE GUTTER FLAG AT ALL PAVEMENT EDGES.

TYPICAL STREET SECTION
(NOT TO SCALE)

REVISIONS					
1	Chages due to detention basin	2/28/05	6		
2	Addition of south area	04/21/05	7		
3	Revisions per 5/27/05 letter	6/6/05	8		
4			9		
5			10		

PREPARED BY:
ROGINA & ASSOCIATES, LTD.
ENGINEERS · SURVEYORS · PLANNERS
93 Caterpillar Drive · Joliet, Illinois · 815/729-0777 · FAX 815/729-0782

CLIENT:
DOW MORTGAGE COMPANY
1600 PLAINFIELD ROAD
JOLIET, ILLINOIS 60435

PROJECT:
BLOCK 14
LAKEVIEW ADDITION TO JOLIET

PROJECT NO: 1151.045	DESIGNED BY: R.A.R.
DATE: 01/12/05	DRAWN BY: KLD/ERH
SCALE: 1"=30'	CHECKED BY: R.A.R.

Preliminary Engineering
Preliminary Plat of Subdivision

SHEET NO. 1 OF 1

Y:\1000\1100\1151045\dwg\Preliminary.dwg, Preliminary, 6/16/2005 3:36:50 PM